M.V. CURRENT TRANSFORMERS 3.6 kV...36kV
Cast Resin, Indoor or Outdoor Type

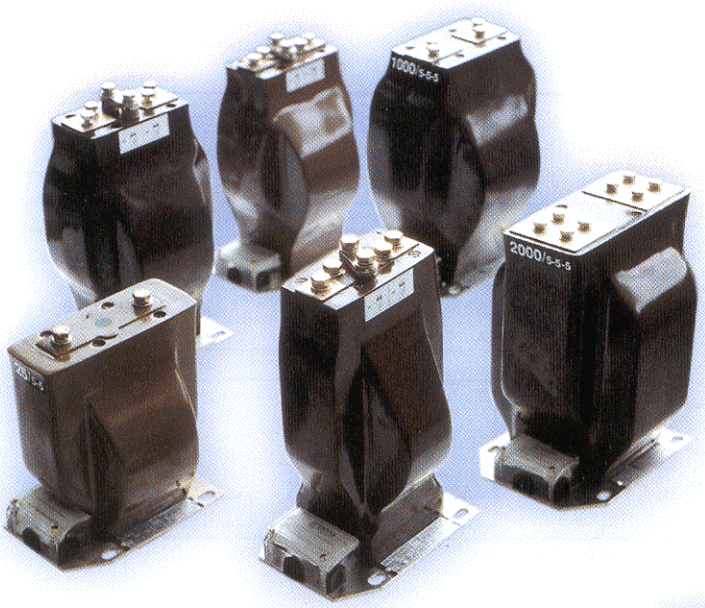

ATM-20 ...30

ATH-20 ...30

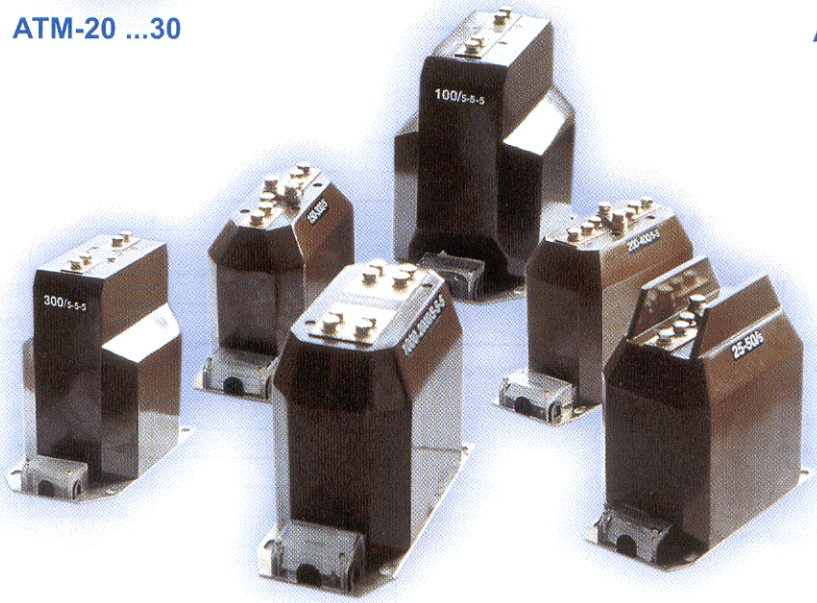

ATB-10 ...30

ATD-10 ...20

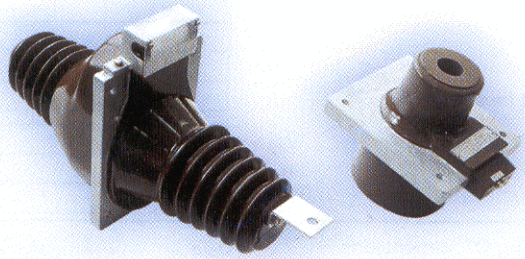

ATG-30, ATSG-30

KAT-60 ...100

INQUIRY / ORDER FORM FOR CURRENT TRANSFORMER

From :.....

Name :..... Dept : .....

Date :.....

Customer Ref. No. :.....

Quantity

TYPE

Standard (IEC, ANSI, BS etc.)				Frequency	Hz
Rated insulation level				kV	
Rated short - time current		kA		Time	S
1 Rated primary current		A			
2 Rated primary current		A			
3 Rated primary current		A	1 sec	2 sec	3 sec
Number of secondaries					
4 Rated continuous thermal current		A			
5 Primary changeable					
6 Secondary changeable					
7 Capacitive voltage divider output terminal					
8 Service conditions			Indoor		Outdoor

Rating plate(s) for device	
Routine test (All in English)	

1st SECONDARY

Measurement ☐ Protection ☐

Rated primary current				A
Rated secondary current				A
Rated output				VA
Accuracy class				
Security factor FS/Accuracy limit factor ALF				
If Class X (V_{kp}, R_{ct}, I_o)	V_{kp}>=			Volts
	R_{ct}<=			Ohms
	I_o<=			mA

2nd SECONDARY

Measurement ☐ Protection ☐

Rated primary current				A
Rated secondary current				A
Rated output				VA
Accuracy class				
Security factor FS/Accuracy limit factor ALF				
If Class X (V_{kp}, R_{ct}, I_o)	V_{kp}>=			Volts
	R_{ct}<=			Ohms
	I_o<=			mA

3rd SECONDARY

Measurement ☐ Protection ☐

Rated primary current				A
Rated secondary current				A
Rated output				VA
Accuracy class				
Security factor FS/Accuracy limit factor ALF				
If Class X (V_{kp}, R_{ct}, I_o)	V_{kp}>=			Volts
	R_{ct}<=			Ohms
	I_o<=			mA

In case of bushing or toroidal - ring CT; dimensions D_{out}: ..... d_{in}: ..... H (max):.....

SPECIAL REQUIREMENTS / NOTES .....

.....

GENERAL DEFINITIONS

General definitions have been given according to International Standards IEC 60044.

Instrument Transformer
A transformer intended to supply measuring instruments meters, protection relays, and other similar apparatus.

Applicable Standards
Instrument transformers must comply with one of the following list of standards and rules applicable in Turkey and various foreign countries.

TURKEY	
TS 620 rules for current transformers,	
TS 718 rules for voltage transformers	
INTERNATIONAL	IEC Publication, 60044
GERMANY	VDE 0414 and DIN EN 60044
BELGIUM	NBN 134
ENGLAND	BS 3938 and 3941
ITALY	GEI 13-1
SWEDEN	Sen 270811
USA	ANSI IEEE 5713

CURRENT TRANSFORMER

An instrument transformer in which the secondary current, in normal conditions of use, is substantially proportional to the primary current and differs in phase from it by angle which is approximately zero for an appropriate direction of the connections.
It isolates the instrument and protection circuit from the primary side and protect the devices against overload according to the overcurrent characteristics of the transformer. Current transformers can have several secondary windings with cores of identical of different characteristics completely isolated from each other.

Measuring Current Transformer
A current transformer intended to supply indicating instruments, integrating meters and similar apparatus.

Protective Current Transformer
A current transformer intended to supply protective relays.

Primary Winding
The winding through which flows the current to be transformed.

Secondary Winding
The winding, which supplies the current circuits of measuring instruments, meters, relays or similar devices.

Secondary Circuit
The external circuit supplied by the secondary winding of a transformer.

Rated Primary Current
The value of the primary current on which the performance of the transformer is based.

Rated Secondary Current
The value of the secondary current on which the performance of the transformer is based.

Rated Transformation Ratio
The ratio of rated primary current to the rated secondary current (I1N /I2N - i.e. 100/5 A).

Current Error (Ratio error)
The error which a transformer introduces into the measurement of a current and which arises from the fact that the actual transformation ratio is not equal to the rated transformation ratio.
The current error expressed in per cent is given by formula:

$$\text{Current error } \% = \frac{(K_n I_s - I_p)}{I_p} \times 100$$

Where
K_n is the rated transformation ratio;
I_p is the actual primary current
I_s is the actual secondary current when I_p is flowing, under the conditions of measurement.

Accuracy Class
A designation assigned to a current transformer errors of which remain within specified limits under prescribed conditions of use.

Burden
The impedance of the secondary circuit in ohms and power-factor. The burden is usually expressed as the apparent power in voltamperes absorbed at a specified power-factor and at the rated secondary current.

Rated Burden
The value of the burden on which the accuracy requirements are based on.

Rated Output
The value of the apparent power (in voltamperes at a specified power-factor) which the transformer is intended to supply to the secondary circuit at the rated secondary current and with rated burden connected to it.

Rated Insulation Level
The combination of voltage values which characterizes the insulation of a transformer with regard to its capability to withstand dielectric stresses.

Rated Frequency
This is the frequency for which the transformer is designed and given in Hz on the rating plate.

Rated Short-Time Thermal Current (I_{th})
The r.m.s. value of the primary current which a transformer will withstand for one scond without suffering harmful effects, the secondary winding being short circuited.

Rated Dynamic Current (I_{dyn})
The peak value of the primary current which a transformer will withstand, without being damaged electrically or mechanically by the resulting electromagnetic forces, the secondary winding being short-circuited.

Rated Continuous Thermal Current
The value of the current which can be permitted to flow continuously in the primary winding, the secondary winding being connected to the rated burden, without temperature rise exceeding the values specified.

Terminals
Terminal designations:

Primary terminals	
Single winding	P1, P2
Double winding (Series or parallel)	P1, P2 and C1, C2
Several separate Windings	1P1, 1P2, ... and 2P1, 2P2, ...
With tappings	1 P1, 1P2, 2P2, ...
Secondary terminals	
Single core	S1, S2
Double core	1S1,1S2 and 2S1-2S2,
Multi core	1S1, 1S2, ... and 2S1, 2S2, ...
With tappings	1S1 and 1S2, 2S2, ...

Capacitive voltage divider output terminal may be included with current transformers upon request.

General terminal & core designations

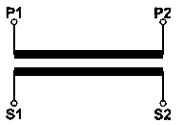

Single primary - single secondary

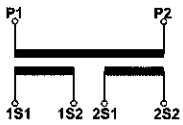

Single primary - Double secondary

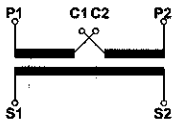

Double primary - single secondary

Connection
Main H.V. network is connected to the primary terminals by busbars and a low voltage current to measuring or protection circuits is supplied through the secondary terminals.
Secondary terminals must never be open-circuited. One secondary terminal (one only) is to be grounded for each secondary winding.

ATM-20...30
M.V. CURRENT TRANSFORMERS U_n=3.6...36kV

Indoor type-cast resin insulated

The alternative combinations of rated short-time thermal currents, core specifications given in the following tables are recommended. Other combinations on request.

Type		ATM-20				ATM-30
Operating voltage (max.)	kV	7.2	12	17.5	24	36
Rated power frequency withstand voltage (1minutes)	kV	22	28	38	50	70
Impulse test voltage (1,2/50µs)	kV	60	75	95	125	170
Rated frequency	Hz	50 or 60				50 or 60
Primary rated current	A	10...1500				10...1500
Multiratio current transformers (primary current)	A	2x10...2x600				2x10...2x600
Maximum rated continuous thermal current	xI_n	1.2				1.2
Secondary rated current	A	5 or 1				5 or 1
Rated short time thermal current -I_{th},1sec	kA	30				30
Rated dynamic current (I_{dyn}=2.5xI_{th})(Max 75kA)	kA	75				75
Short time load (Mechanical)	N	5000				5000
Weight (approx)	kg	15-20				22-45

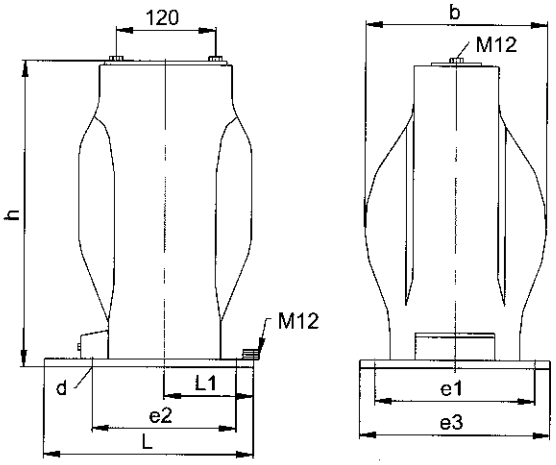

I.Core			II.Core			ATM-20 U_n=7.2..24Kv				ATM-30 U_n=36kV									
Cl	n	VA	Cl	n	VA	Mould Number I_{th}=...xI_n				Mould Number I_{th}=...xI_n									
						100	200	300	400	100	200	300	400	500	600	700	800	900	1000
0.5	Fs5	15				2	2	2	3	5	5	2	3	5	5	8	9	9	9
1		30				2	2	2	3	5	5	2	3	5	5	8	9	9	9
5P	10	15				2	2	2	3	2	2	3	3	5	5	8	9	9	9
10P		30				2	2	2	3	3	3	3	3	5	5	8	9	9	9
0.5	Fs5	15	5P	10	15	3	3	3	-	3	3	4	4	6	6	9	9	9	9
1			10P		30	3	3	3	-	3	3	4	4	6	6	9	9	9	9
		30			15	3	3	3	-	3	3	4	4	6	6	9	9	9	9
					30	3	3	3	-	3	3	4	4	6	6	9	9	9	9

TYPE	b	d	e1	e2	e3	h ±5	L1	L	U_n	m	n
ATM 20-2	185	14	150	150	180	260	95	230	7.2 kV 12 kV	85	90
ATM 20-3	185	14	150	150	180	260	95	230	17.5 kV 24 kV	190	225
ATM 30-2	210	14	150	150	180	360	95	230	36kV	270	295
ATM 30-3	207	14	150	150	180	360	95	230			
ATM 30-4	225	14	150	150	180	360	95	230			
ATM 30-5	210	14	180	176	210	260	110	260			
ATM 30-6	230	14	180	176	210	360	110	260			
ATM 30-7	240	14	150	150	180	360	95	230			
ATM 30-8	230	14	180	176	210	360	110	260			
ATM 30-9	230	14	210	300	240	390	170	365			
ATM 30-10	215	14	150	150	180	360	95	230			
ATM 30-15	200	14	150	150	180	360	95	230			

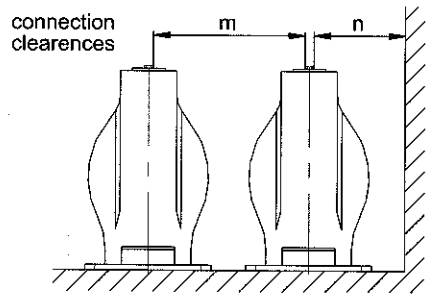

ATB-10...30
M.V. CURRENT TRANSFORMERS U_n=3.6...36kV

Indoor type-cast resin insulated

Type		ATB 10-S ATB 10-2		ATB-20 ATB20-1 ATB20-2		ATB30-1 ATB30-2 ATB30-S
Operating voltage (max.)	kV	7.2	12	17.5	24	36
Rated power frequency withstand voltage (1minutes)	kV	22	28	38	50	70
Impulse test voltage (1,2/50µs)	kV	60	75	95	125 or 150	170 or BIL 200
Rated frequency	Hz	50 or 60				
Primary rated current	A	10...1500		10...2500		10...1500
Multiratio current transformers (primary current)	A	2x10...2x600				
Maximum rated continuous thermal current	xI_n	1.2	1.2	1.2	1.2	1.2
Secondary rated current	A	5 or 1				5 or 1
Rated short time thermal current -I_{th},1sec	kA	80	80	80	80	80
Rated dynamic current (I_{dyn}=2.5xI_{th}) (Max 75kA)	kA	100	100	100	100	100
Short time load (Mechanical)	N	5000		5000		5000
Weight (approx)	kg	20-28		30-36		40-50

Capacitive voltage divider output terminal may be included with current transformers upon request.

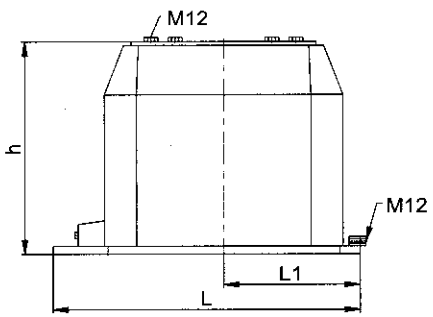

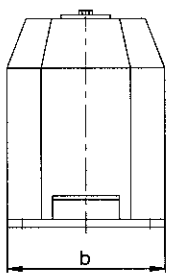

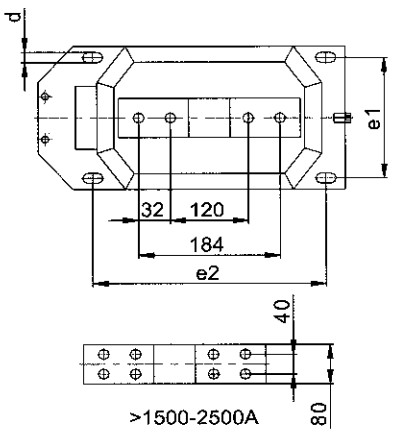

I.Core			II.Core			ATB-10 U_n=3.6-7.2-12kV										ATB-20 U_n=17.5-24kV										ATB-30 U_n=36kV									
Cl	n	VA	Cl	n	VA	Mould Number I_{th}...xI_n										Mould Number I_{th}...xI_n										Mould Number I_{th}...xI_n									
						100	200	300	400	500	600	700	800	900	1000	100	200	300	400	500	600	700	800	900	1000	100	200	300	400	500	600	700	800	900	1000
0.5	Fs5	15				BS	BS	BS	2	2						0	0	0	1	1	1	1	1	2		S	S	S	S	S	1	1	1	1	1
1		30				2	2	2	2	2						0	0	0	1	1	1	1	1	2		S	S	S	S	S	1	1	1	1	1
5P	10	15				BS	BS	BS	2	2						0	0	0	1	1	1	1	1	2		S	S	S	S	S	1	1	1	1	1
10P		30				2	2	2	2	2						0	0	0	1	1	1	1	1			S	S	S	S	S	1	1	1	1	1
0.5	Fs5	15	5P	10	15	BS	BS	BS	2	2						0	0	0	1	1	1	2	2			S	S	S	1	1	1	1	2	2	2
1		30	10P		30	2	2	2	2	2						1	1	1	2	2	2	2	2			S	S	S	1	1	1	1	2	2	2
		15			15	BS	BS	BS	2	2						1	1	1	2	2	2	2	2			S	S	S	1	1	1	1	2	2	2
		30			30	2	2	2	2	2						1	1	1	2	2	2	2	2			S	S	S	1	1	1	1	2	2	2

TYPE	b	e1	e2	d	h±5	L1	L	m	n	I_{th} (max)
ATB 10-B	148	125	270	11	220	170	355	85	90	300 I_n
ATB 10-S	148	120	300	14	220	170	385	85	90	300 I_n
ATB 10-2	178	150	300	14	215	170	385	85	90	500 I_n
ATB 20	148	120	300	14	255	170	385	190	225	300 I_n
ATB 20-1	178	150	300	14	255	170	385	190	225	800 I_n
ATB 20-2	178	150	300	14	280	170	385	190	225	1000 I_n
ATB 30-1	220	185	300	14	365	170	385	270	295	1000 I_n
ATB 30-2	240	210	300	14	365	170	385	270	295	1000 I_n
ATB 30-S	220	185	300	14	370	170	365	270	295	500 I_n

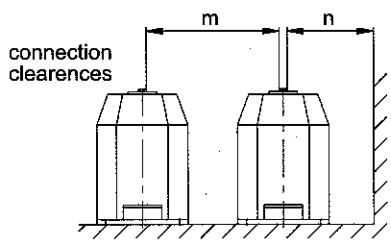

ATB 10-SB, ATB 10-ST
M.V. CURRENT TRANSFORMER U_n=3.6...12kV

Indoor type-cast resin insulated

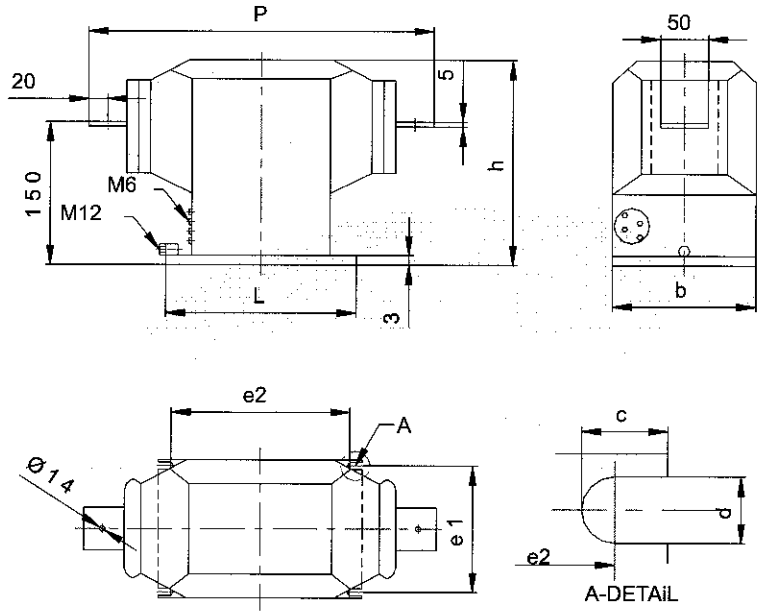

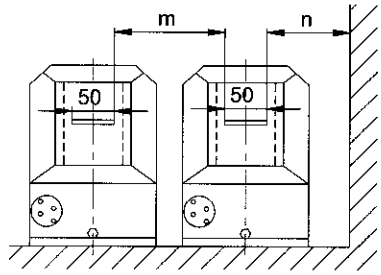

TYPE	b	c	e1	e2	d	h ±5	L	m	n	p
ATB 10-SB	155	15	127	184	14	225	200	85	90	350
ATB 10-ST	156	22	130	260	14	220	290	85	90	450

Type	ATB 10-SB			ATB 10-ST		
Standard	IEC60044-1 (IEC - 185)/BS 3938					
Max.Voltage	12kV					
Insulation Level	12/28/75kV					
Frequency	50 or 60 Hz					
Short - time current	40xI_n / 1sec.	400 x I_n 1 Sec (single ratio) max.40kA / 1sec 200 x I_n 1 Sec (double ratio) max.40kA / 1sec				
Rated Output	15VA			30VA	30VA	
Accuracy Class	0.2	0.5	5P 10	1	5P 15	5P 10
Primary Current (A)	5	10	15	20	25	30
	40	50	60	75	100	120
	150	200	300	400	500	600
	5-10	10-20		15-30	20-40	
	25-50	30-60		40-80	50-100	
	75-150	100-200		150-300	200-400	
	300-600					
Secondary Current (A)	5 or 1					

ATD-10...ATD-20
M.V. CURRENT TRANSFORMERS U_n=3.6...24kV

Indoor type cast resin insulated

The alternative combinations of rated short-time thermal currents, core specifications given in the following tables are recommended. Other combinations on request.

Type		ATD-10		ATD-20	
Operating voltage (max.)	kV	7.2	12	17.5	24
Rated power frequency withstand voltage (1minutes)	kV	22	28	38	50
Impulse test voltage (1,2/50μs)	kV	60	75	95	125
Rated frequency	Hz	50 or 60			
Primary rated current	A	800...3000		800...4000	
Multiratio current transformers(primary current)	A	-		-	
Maximum rated continous thermal current	xI_n	1.2	1.2	1.2	1.2
Secondary rated current	A	5 or 1	5 or 1	5 or 1	5 or 1
Rated short time thermal current -I_{th},1sec	kA	100	100	100	100
Rated dynamic current (I_{dyn}=2.5xI_{th})	kA	Pratically unlimited			
Short time load (Mechanical)	N	3000	3000	3000	3000
Weight (approx)	kg	18		23	

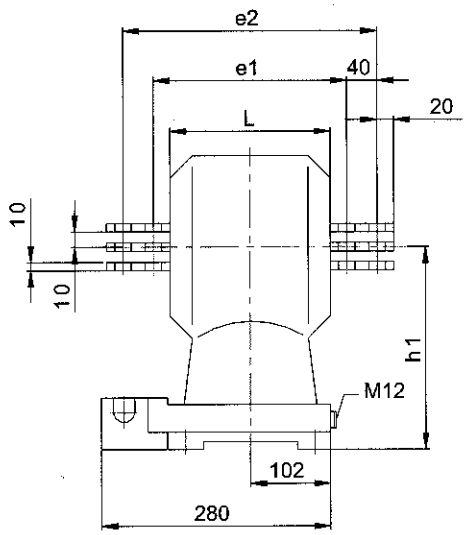

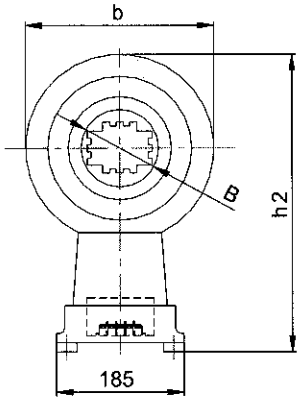

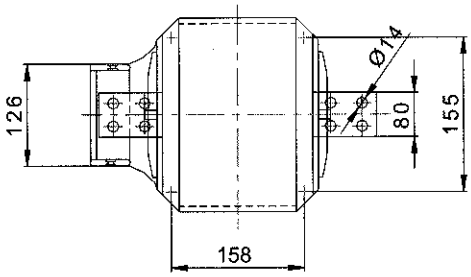

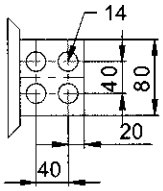

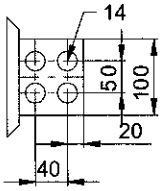

connection clearences

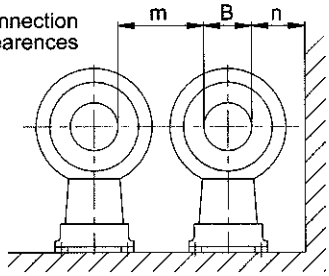

TYPE	b	e1	e2	h1	h2	L	m	n	B
ATD-10	214	210	290	235	342	176	135	110	115
ATD-20	260	230	310	295	425	196	195	225	115

Note:
Primary Current — 3000A for ATD-10; 4000A for ATD-20

Secondary Current — 1A for ATD-20

PRIMARY CURRENT	BUSBARS
Up to 1500A	2X50X10
*1500-2500 A	2X80X10
*2500-3000 A	2X100X10
*3000-4000 A	3X80X10

*FS 10, after 1500A.

KAT-60, KAT-80, KAT-100
L.V. CURRENT TRANSFORMERS U_n=0.6kV

WINDOW TYPE CABLE MOUNTED

Cable type measuring transformers
Cable type protection transformers
Earth fault protection,over current factor n<10

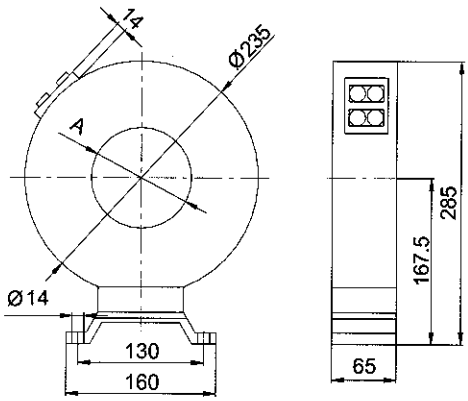

Nominal Ratio ...A / ...A	RATED POWER (VA) Ø 60,80,100mm for cable	
	CI 1	CI 3
50/1	-	3.75
60/1	-	3.75
75/1	1.25	5
100/1	3.75	7.5
150/1	5	15
200/5	10	30
250/5	15	30
300/5	15	60
400/5	15	60
500/5	30	60
600/5	30	60
750/5	30	60
1000/5	30	60
2000/5	30	60

TYPE	A
KAT-60	60
KAT-80	80
KAT-100	100

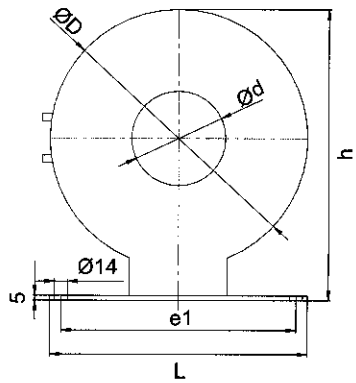

TYPE (Ø d)	L	e1	D	d	h	Thickness
Ø275	275	250	275	60-100	310	90
Ø310	310	260	310	60-100	350	65

BUSHING CURRENT TRANSFORMERS
TOROIDAL - RING TYPE TRANSFORMERS
U_n=0.72 kV

FOR POWER TRANSFORMERS AND CABLE MOUNTING

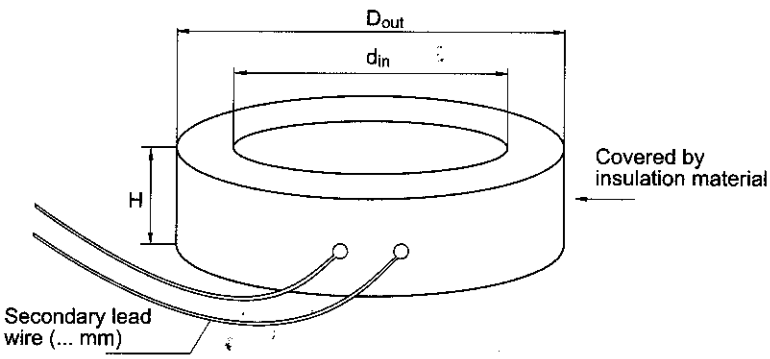

SPECIFICATIONS		
Standards		IEC60044-1
Operating voltage (max.)	kV	0.72
Insulation level	kV	3
Rated primary current	A	50...5000
Rated secondary current	A	1, 1.5, ... 5
Rated output	VA	5... 400
Frequency	Hz	50 or 60
Number of primary		1...
Number of secondary		1... 4

* Other standards are olso applicable i.e BS 3938, ANSI IEEE 5713, AS...
* Suitable for operation under oil of continuous 130 °C
* Isolated by insulation paper or black PVC
* Customer designed dimensions are also available
* Applicable for measurement and protection purposes

Dimensions (mm)	D_{out} (max)	d_{in}	H (max)	Mass (Kg)
To be provided by customer				

ATG-30, ATSG-30
M.V. BUSHING CURRENT TRANSFORMERS U_n=36kV

Indoor type cast resin insulated

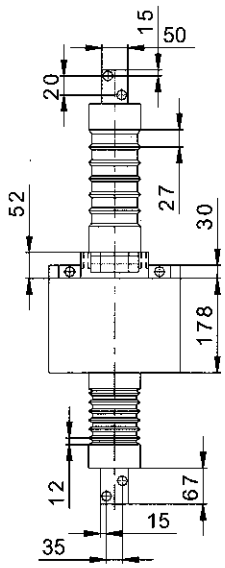

Type		ATSG-30	ATG-30
Operating voltage (max.)	kV	36	36
Rated power frequency with stand voltage (1min.)	kV	70	70
Impulse test voltage(1,2/50μs)	kV	170	170
Rated frequency	Hz	50 or 60	
Primary rated current	A	5...600	600...3000
Multiratio current transformers(primary current)	A	2x5... 2x300	-
Maximum rated continous thermal current	xI_n	1.2	1.2
Secondary rated current	A	5 or 1	5 or 1
Rated short time thermal current -I_{th},1sec	kA	60	60
Rated dynamic current (I_{dyn}=2.5xI_{th}) (Max75kA)	kA	75 kA	
Short time load (Mechanical)	N	5000	5000
Weight (approx)	kg	36	40

Single and double core Current Transformers
Thermal current limits (max) I_{th}

	I.Core			II.Core			III.Core			U_n-36kV
	Cl	n	VA	Cl	n	VA	Cl	n	VA	I_{th}...xI_n
ATSG-30	0.5	Fs5	15							300
	1		30							200
	5P	10	15							250
	10P		30							150
	0.5			5P	10	15				100
		Fs5	15			30				100
	1		30	10P		15				100
						30				100
ATG-30	Cl	n	VA	Cl	n	VA	Cl	n	VA	I_{th}...xI_n
	0.5	Fs5	15	5P	10	15	5P	10	15	100
						30			30	100
	1		30	10P		15	10P		15	100
						30			30	100

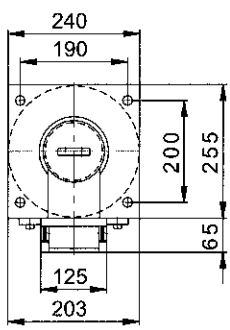

ATG-30

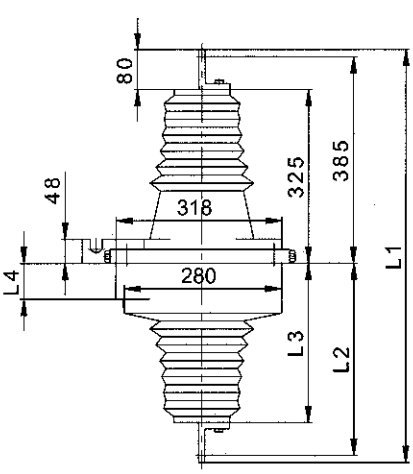

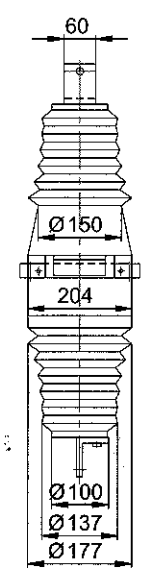

connection clearences

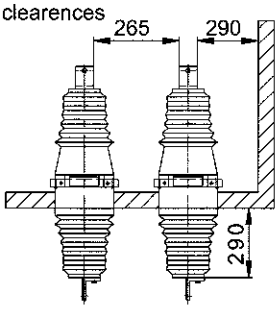

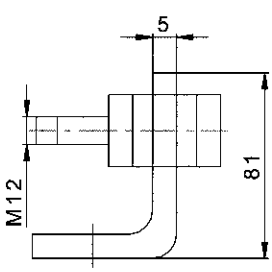

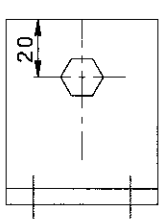

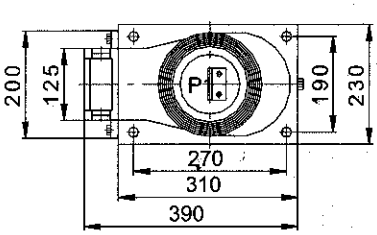

ATSG-30

wall hole

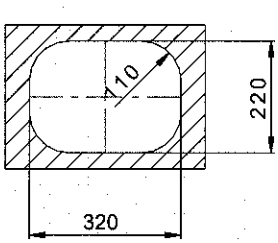

I_{th} ~ kA	d
I_{th} < = 40	M12
40 < I_{th} < 60	M12

L1	L2	L3	L4
810	385	325	67

ATH-20...32
M.V. CURRENT TRANSFORMERS U_n:7.2...36kV

Outdoor type cast resin insulated

The alternative combinations of rated short - time thermal currents, core specifications given in the following tables are recommended. Other combinations on request.

Type		ATH-20	ATH-21	ATH-22	ATH-30 ATH-32
Operating voltage (max.)	kV	12	17.5	24	36
Rated power frequency withstand voltage (1min.)	kV	28	38	50	70
Impulse test voltage (1,2/50µs)	kV	75	95	125 or 150	170 or BIL 200
Rated frequency	Hz	50 or 60 or other frequencies on request			
Primary rated current	A	5...1500	5...2500		5...2500
Multiratio current transformers (primary current)	A	2x5...2x600			2x5...2x600
Maximum rated continous thermal current	xI_n	1.2			1.2
Secondary rated current	A	5 or 1			5 or 1
Rated short time thermal current -I_{th},1sec	kA	40			40
Rated dynamic current (I_{dyn}=2.5xI_{th}) (Max75kA)	kA	100			100
Short time load (Mechanical)	N	2400			2000-2500
Weight (approx)	kg	24	55		70

Thermal current (I_{th}) table

I_{th} : .....xI_n
I_{th} : current limits for double core current transformers

TYPE	1.CORE Fs 5		2.CORE			
			5P 10		10P 10	
	CL	VA	15	30	15	30
ATH-20	-	-	-	-	-	-
ATH-21	0.5	15	300	250	300	250
ATH-22	0.5	30	800	700	800	700
ATH-30	1	30	250	200	250	200
ATH-32	0.5	30	800	700	800	700

I_{th} : current limits for single core current transformers

CLASS	Cl.0.5 Fs5		Cl.0.5 Fs5		5P 10		10P 10	
TYPE \ VA	15	30	15	30	15	30	15	30
ATH-20	200	100	200	100	100	100	100	100
ATH-21	500	400	600	500	500	400	500	400
ATH-22	1000	900	1000	900	500	400	500	400
ATH-30	500	400	600	500	500	400	500	400
ATH-32	1000	900	100	900	500	400	500	400

TYPE	b	B	Ød	e1	e2	h ±5	L	L1	Min.Flash Over Distance	Min. Creepage Distance
ATH-20	220	245	220	178	175	340	245	105	335	630
ATH-21	260	282	368	225	181	365	385	140	350	825
ATH-22	330	355	410	290	252	370	450	180	365	815
ATH-30	260	282	380	225	181	485	385	140	450	1140
ATH-32	330	355	410	290	252	477	455	180	450	1140

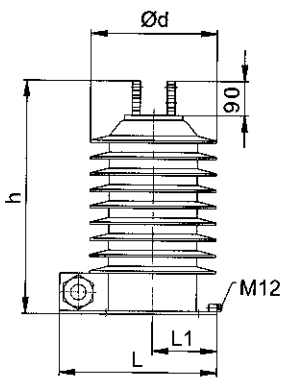

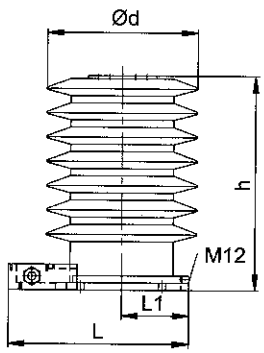

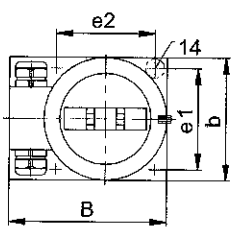

ATH-20

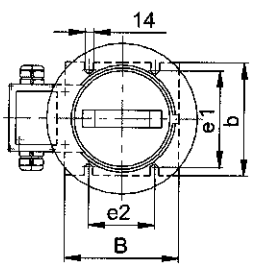

ATH-21
ATH-22
ATH-30
ATH-32

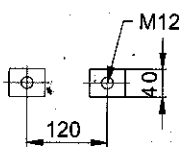

<2x300A or 600A

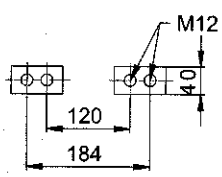

<2x600A or <1500A

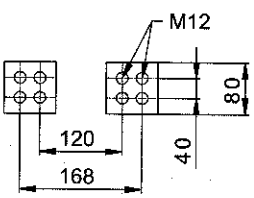

>2000-2500A

PRIMARY CONNECTION BUS-BARS

ATY-30, VTY-30, 2VTY-30
M.V. CURRENT and VOLTAGE TRANSFORMERS 3.6kV ... 36kV

Outdoor type oil limmersed

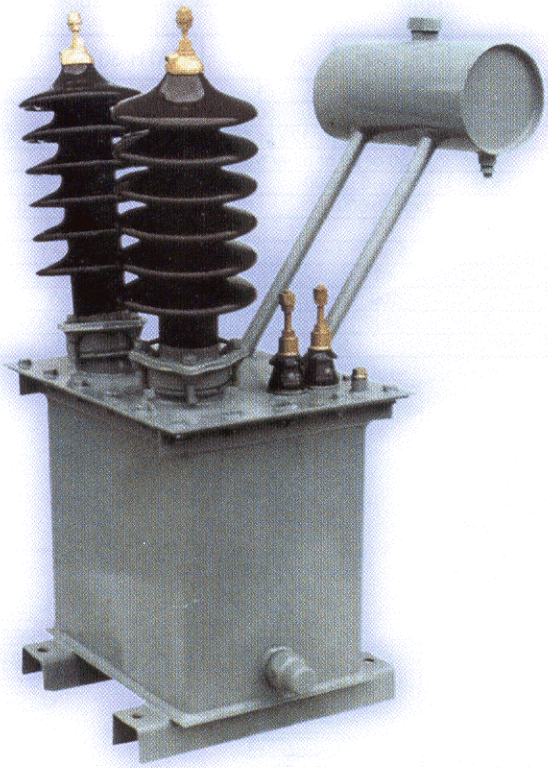

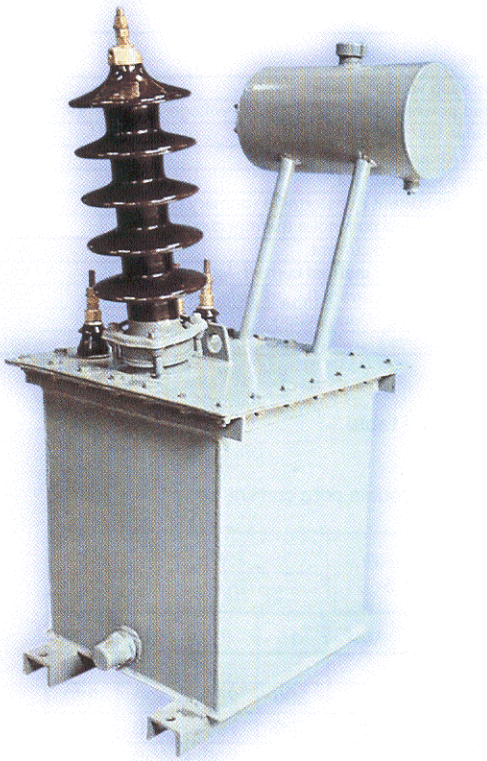

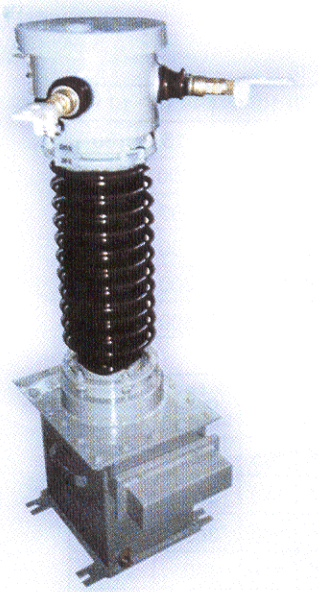

M.V. VOLTAGE TRANSFORMERS 36 kV
(Outdoor type, Double Pole Insulated,
(Double Secondary)
RATED PRIMARY VOLTAGE :36kV
RATED SECONDARY VOLTAGE :
1. Winding : 100V - Class : 1.0 60 VA
2. Winding : 220V - Class : 3.0 80 VA

M.V. CURRENT TRANSFORMERS 36 kV
(Outdoor type, Double Secondary)
RATED SHORT TIME CURRENT : I_{th}=100x I_n
RATED PRIMARY CURRENT : 200 A
RATED SECONDARY CURRENT : 5 A - 5A
1. Core : 0.5 Fs 5, Burden : 30 VA
1. Core : 5P10, Burden : 30 VA

ATY-30
M.V. CURRENT TRANSFORMERS up to 36kV
Outdoor type oil - immersed

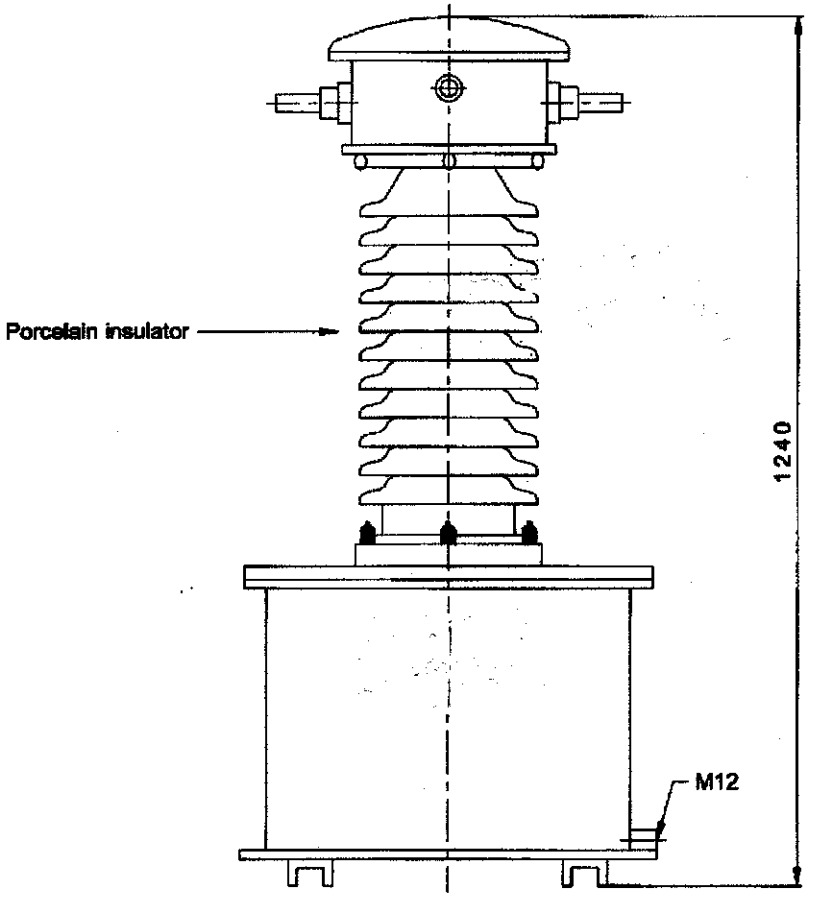

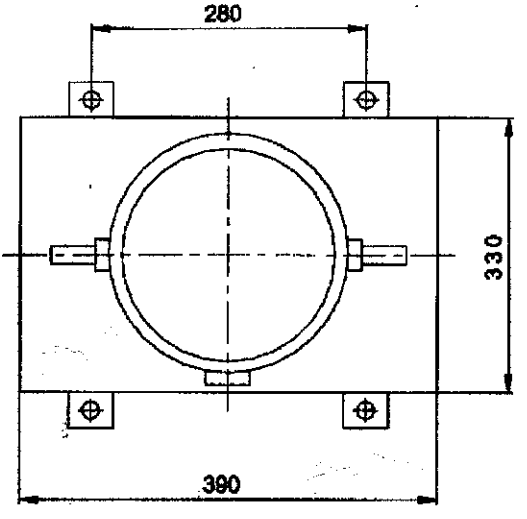

Other designes and combinations for 12 kV, 15 kV, 24 kV are also available upon request.

Rated frequency	:50 or 60 Hz
Insulation level	:36/70/170kV
Rated primary current (I_p)	:50.....2000A
Rated secondary current (I_s)	:1 or 5 A
With one, two or three cores, measuring and protection core combinations	
Referance standards	:IEC60044-1 (IEC 185), TS620, or BS, ANSI, AS standards upon request.